SPECIFICATION CONTROL DRAWING

THIS DRAWING CONTAINS INFORMATION PROPRIETARY TO RF INDUSTRIES, LTD. ANY UNAUTHORIZED USE OF THIS DRAWING IS EXPRESSLY PROHIBITED. ANY VIOLATION IS PUNISHABLE UNDER U.S. COPYRIGHT LAWS.

REV	DESCRIPTION	DWN	DATE	APPROVED
A	ENGINEERING RELEASE	CJ	8/15/91	–
B	UPDATE DRAWING	KMM	6/14/99	R. RICE

ALL DIMENSIONS ARE REFERENCE ONLY

008974

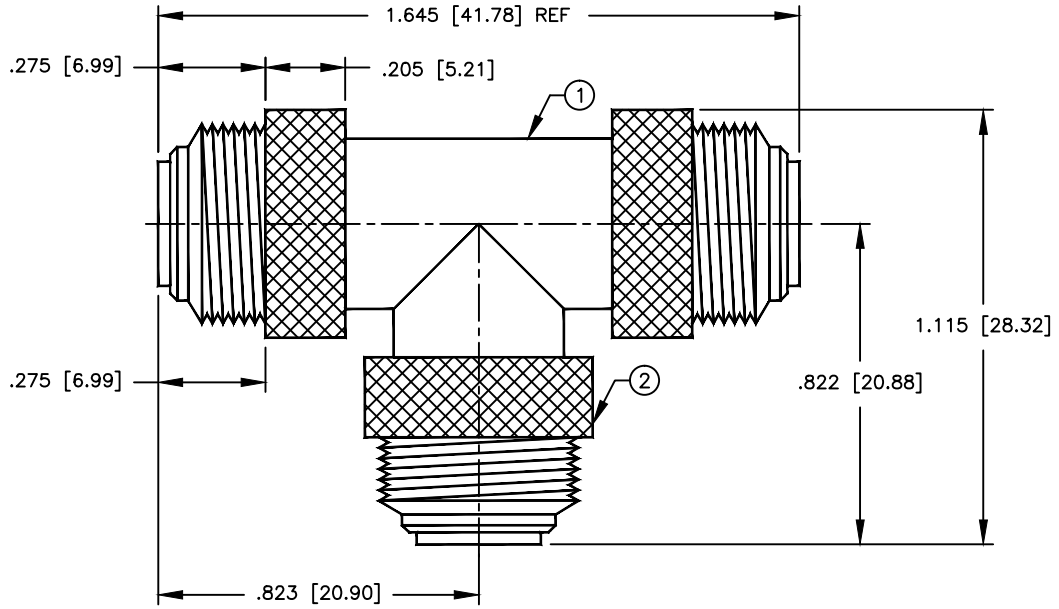

DIMENSIONS ARE TYPICAL WHERE APPLICABLE

SPECIFICATIONS:

IMPEDANCE: 50 OHMS

ITEM	DESCRIPTION	QTY	MATERIAL	FINISH
5	DIELECTRIC	3	PTFE	NONE
4	CONTACT	1	BRASS	GOLD
3	CONTACT	1	BRASS	GOLD
2	BODY	1	BRASS	SILVER
1	BODY	1	BRASS	SILVER

DIMENSIONS ARE IN INCHES AND [MILLIMETERS]

UNLESS OTHERWISE NOTED TOLERANCES ARE:
DECIMALS DIAMETER

APPROVALS	DATE
DRAWN K. MAXWELL	6/14/99
CHECKED	
ORJ DRAWN C. JONES	8/15/91

RF connectors
DIVISION OF RF INDUSTRIES, LTD.
7610 MIRAMAR RD
SAN DIEGO,CA 92126
(619)549-6340
(619)549-6345 FAX

PT-4000-027

UNIDAPT "T" ADAPTER

SIZE	CABLE GROUP	DWG NO.	REV
A	N/A	7185	B

SCALE: NTS | CAD FILE | SHEET 1 OF 1